LOCATION MAP AND LEGAL DESCRIPTION

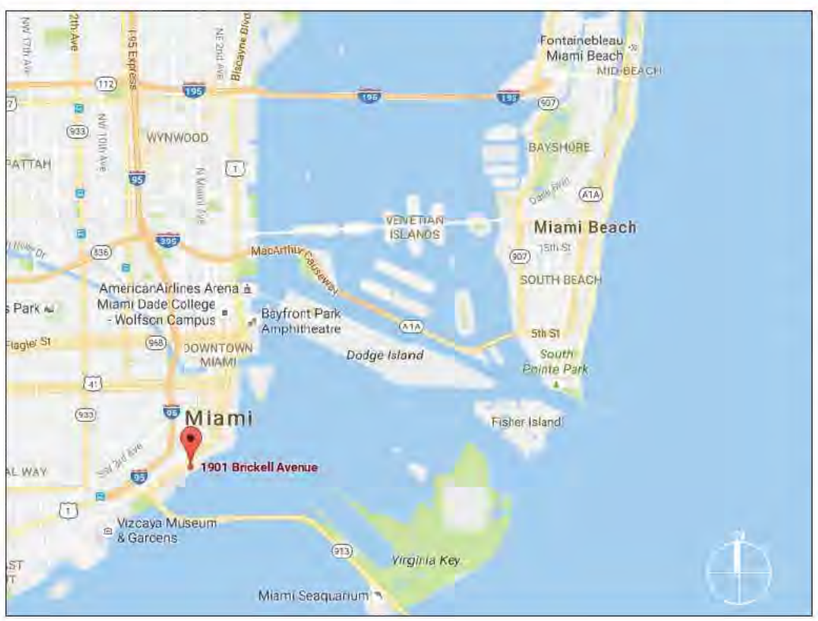

PROJECT SITE LOCATION:
1901 Brickell Ave
Miami, FL 33131

LATITUDE: 25°45'11.82"N
LONGITUDE: 80°11'46.05"W

FOLIO No.: 01-4139-022-3810

FULL LEGAL DESCRIPTION

BRICKELL PLACE CONDO

BRICKELLS FLAGLER PB 5-44

LOTS 53 TO 57 INC LESS NWLY 70FT

FOR R/W BLK B & SUBMERGED LAND

LYG SELY & ADJ TO SAID LOTS

GENERAL NOTES:

1. ELEVATIONS SHOWN REFER TO THE NATIONAL GEODETIC VERTICAL DATUM (NGVD) OF 1929.
2. ALL DIMENSIONS ON PLANS ARE SUBJECT TO VERIFICATION IN THE FIELD.
3. IT IS THE INTENT OF THESE PLANS TO BE IN ACCORDANCE WITH APPLICABLE CODES AND AUTHORITIES HAVING JURISDICTION. ANY DISCREPANCIES BETWEEN THESE PLANS AND APPLICABLE CODES SHALL BE IMMEDIATELY BROUGHT TO THE ATTENTION OF ENGINEER BEFORE PROCEEDING WITH WORK. CONTRACTOR AND ALL SUBCONTRACTORS ARE RESPONSIBLE FOR ALL LINES, ELEVATIONS, AND MEASUREMENTS IN CONNECTION WITH THEIR WORK.
4. IT IS THE INTENT OF THESE PLANS AND THE RESPONSIBILITY OF THE CONTRACTOR TO COMPLY WITH LOCAL, STATE, AND FEDERAL ENVIRONMENTAL PERMITS ISSUED FOR THIS PROJECT. IT SHALL BE THE CONTRACTOR'S RESPONSIBILITY TO FAMILIARIZE AND GOVERN HIMSELF BY ALL PROVISIONS OF THESE PERMITS.
5. APPLICABLE BUILDING CODE: FLORIDA BUILDING CODE, 2014 EDITION (AND CURRENT ADDENDUMS).
6. APPROVED CONTRACTOR TO DETERMINE THE SUITABILITY OF EXISTING STRUCTURES AND VERIFY ALL DIMENSIONS. THE APPROVED CONTRACTOR IS RESPONSIBLE FOR ALL METHODS, MEANS, SEQUENCES AND PROCEDURES OF WORK.
7. DO NOT SCALE DRAWINGS FOR DIMENSIONS.
8. CONTRACTOR TO VERIFY LOCATION OF EXISTING UTILITIES PRIOR TO COMMENCING WORK.
9. CONTRACTOR TO PROPERLY FENCE AND SECURE AREA WITH BARRICADES.
10. ANY DEVIATION AND/OR SUBSTITUTION FROM THE INFORMATION PROVIDED HEREIN SHALL BE SUBMITTED TO THE ENGINEER FOR APPROVAL PRIOR TO COMMENCEMENT OF WORK.
11. ALL NEW MATERIALS AND/OR PATCHWORK SHALL BE PROVIDED TO MATCH EXISTING MATERIALS AND/OR ADJOINING WORK WHERE PRACTICAL EXCEPT AS SPECIFICALLY NOTED HEREIN.
12. LICENSED CONTRACTOR SHALL USE ALL POSSIBLE CARE TO PROTECT ALL EXISTING MATERIALS, SURFACES, AND FURNISHINGS FROM DAMAGE DURING ALL PHASES OF CONSTRUCTION.
13. THE LICENSED CONTRACTOR TO INSTALL AND REMOVE ALL SHORING AND BRACING AS REQUIRED FOR THE PROPER EXECUTION OF THE WORK.
14. ALL NEW WORK AND/OR MATERIALS SHALL CONFORM TO ALL REQUIREMENTS OF EACH ADMINISTRATIVE BODY HAVING JURISDICTION IN EACH PERTAINING CIRCUMSTANCE.
15. THE CONTRACTOR WILL EMPLOY AND MAINTAIN ADEQUATE SEDIMENT AND EROSION CONTROL MEASURES TO PROTECT BISCAYNE BAY FROM SEDIMENT AND CONSTRUCTION DEBRIS.

DOCK LL: 100 PSF

CONCRETE

1. CONCRETE SHALL CONFORM TO ACI 318 (LATEST ED.) AND SHALL BE REGULAR WEIGHT, SULFATE RESISTANT, WITH A DESIGN STRENGTH OF 5,000 PSI AT 28 DAYS W/ A MAX WATER-CEMENTIOUS MATERIALS RATIO, BY WEIGHT, NORMAL WEIGHT AGGREGATE CONCRETE OF 0.40.
2. OWNER SHALL EMPLOY AND PAY FOR TESTING SERVICES FROM AN INDEPENDENT TESTING LABORATORY FOR CONCRETE SAMPLING AND TESTING IN ACCORDANCE W/ ASTM.
3. LICENSED CONTRACTOR IS RESPONSIBLE FOR THE ADEQUACY OF FORMS AND SHORING AND FOR SAFE PRACTICE IN THEIR USE AND REMOVAL.
4. CONCRETE COVER SHALL BE 3" UNLESS OTHERWISE NOTED ON APPROVED DRAWINGS.
5. REINFORCING STEEL SHALL BE IN CONFORMANCE WITH THE LATEST VERSION OF ASTM A615 GRADE 60 SPECIFICATIONS. ALL REINFORCEMENT SHALL BE PLACED IN ACCORDANCE W/ ACI 315 AND ACI MANUAL OF STANDARD PRACTICE.
6. SPLICES IN REINFORCING BARS SHALL NOT BE LESS THAN 48 BAR DIAMETERS AND REINFORCING SHALL BE CONTINUOUS AROUND ALL CORNERS AND CHANGES IN DIRECTION. CONTINUITY SHALL BE PROVIDED AT CORNERS OR CHANGES IN DIRECTION BY BENDING THE LONGITUDINAL STEEL AROUND THE CORNER 48 BAR DIAMETERS.

PILE DRIVING NOTES

1. PILE DRIVING OPERATIONS SHALL BE OBSERVED BY A SPECIAL INSPECTOR, INCLUDING TEST PILES SUFFICIENT TO DETERMINE THE APPROXIMATE LENGTH REQUIRED TO MEET DESIGN CAPACITY.
2. PILES SHALL BE DRIVEN USING AN APPROVED CUSHION BLOCK CONSISTING OF MATERIAL SO ARRANGED SO AS TO PROVIDE THE TRANSMISSION OF THE HAMMER ENERGY.
3. PILES SHALL BE DRIVEN TO REQUIRED CAPACITY A MIN 12. INTO BERM.
4. PILES SHALL BE DRIVEN WITH A DROP HAMMER OR GRAVITY HAMMER PROVIDED THE HAMMER SHALL WEIGH NO LESS THAN 3,000 POUNDS, AND THE FALL OF THE HAMMER SHALL NOT EXCEED 6 FT.
5. PILES SHALL BE DRIVEN WITH A VARIATION OF NOT MORE THAN $\frac{1}{4}$" PER FOOT FROM THE VERTICAL, OR FROM THE BATTER LINE INDICATED, WITH A MAX VARIATION OF THE HEAD OF THE PILE FROM THE POSITION SHOWN ON THE PLANS OF NOT MORE THAN 3".
6. WHERE PILING MUST PENETRATE STRATA OFFERING HIGH RESISTANCE TO DRIVING, THE STRUCTURAL ENGINEER OF RECORD OR SPECIAL INSPECTOR MAY REQUIRE THAT PILES BE SET IN PRE-DRILLED OR PUNCHED HOLES. THE PILES SHALL REACH THEIR FINAL PENETRATION BY DRIVING.

BRICKELL PLACE MARINA PHASE 1-SLIP ADD

Miami, Florida

CLIENT:
BRICKELL PLACE MARINA, INC.
C/O MR. ELIO JUNCO
1901 Brickell Ave
Miami, Florida 33131

ENVIRONMENTAL CONSULTANT:
OCEAN CONSULTING, LLC
340 Minorca Avenue, Suite 7
Coral Gables, Florida 33134
Tel: (305) 921-9344
Fax: (305) 677-3254

CONTRACTOR:

PROJECT ENGINEER:
DYNAMIC ENGINEERING SOLUTIONS, INC.
351 S. Cypress Road, Suite 303
Pompano Beach, FL 33060
Office - 954-545-1740
Fax - 954-545-1721

SEAL / SIGNATURE / DATE

John Omslaer
PE 52733, CA 26829

PERMIT DRAWINGS

Issue #	Issue Date
1	October 31, 2016
2	January 26, 2017

PROJECT: 16-5980

PROJECT LOCATION & NOTES

SCALE : AS SHOWN

SHEET NO.

S-1

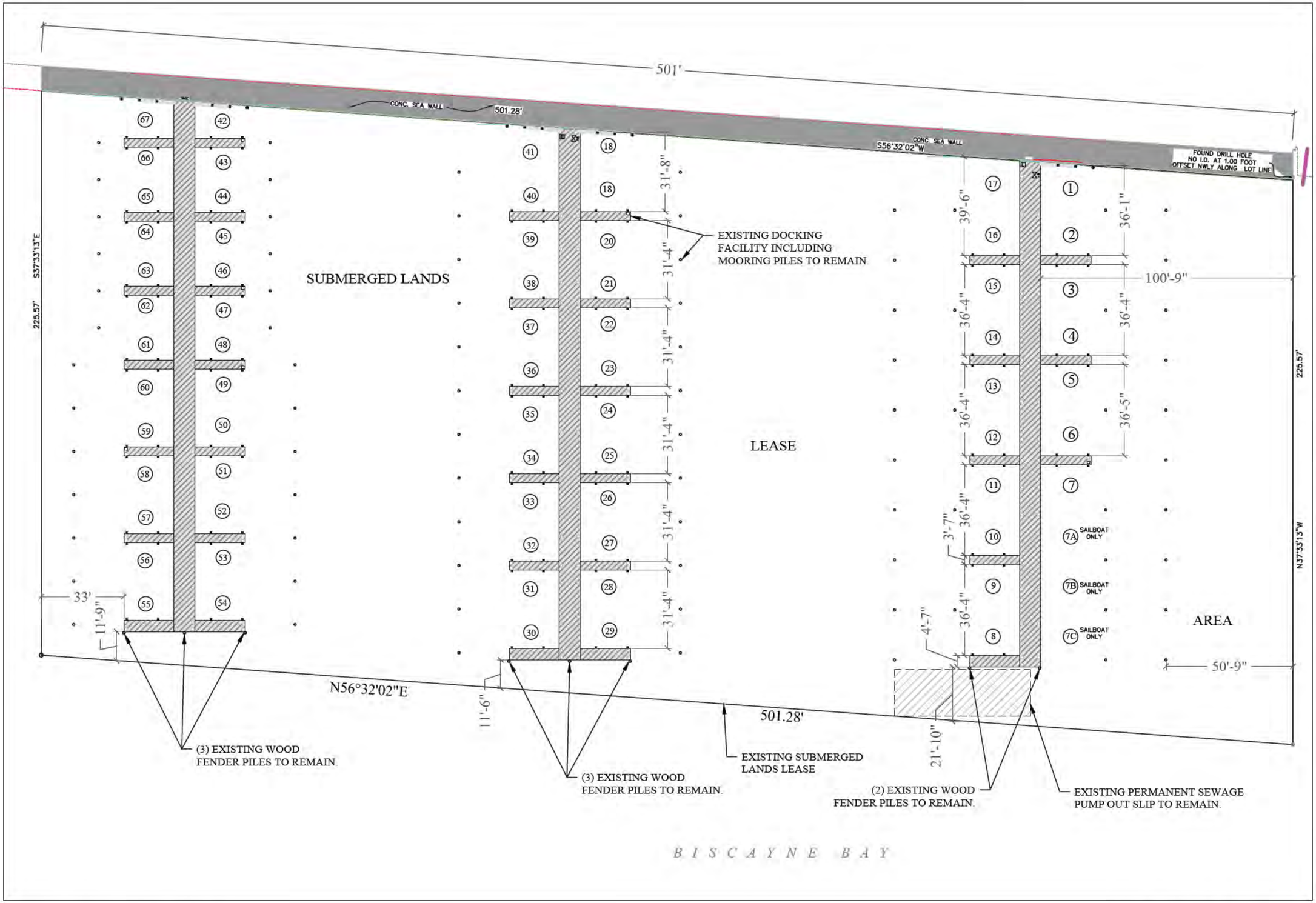

EXISTING CONDITIONS

N

0 25' 50'

SCALE: 1/32" = 1"

BRICKELL PLACE MARINA PHASE 1-SLIP ADD

Miami, Florida

CLIENT:
BRICKELL PLACE MARINA, INC.
C/O MR. ELIO JUNCO
1901 Brickell Ave
Miami, Florida 33131

ENVIRONMENTAL CONSULTANT:
OCEAN CONSULTING, LLC
340 Minorca Avenue, Suite 7
Coral Gables, Florida 33134
Tel: (305) 921-9344
Fax: (305) 677-3254

CONTRACTOR:

PROJECT ENGINEER:
DYNAMIC ENGINEERING SOLUTIONS, INC.
351 S. Cypress Road, Suite 303
Pompano Beach, FL 33060
Office - 954-545-1740
Fax - 954-545-1721

SEAL / SIGNATURE / DATE

John Omslaer
PE 52733, CA 26829

PERMIT DRAWINGS

Issue #	Issue Date
1	October 31, 2016
2	January 26, 2017

PROJECT: 16-5980

EXISTING CONDITIONS

SCALE : AS SHOWN
SHEET NO.

S-2

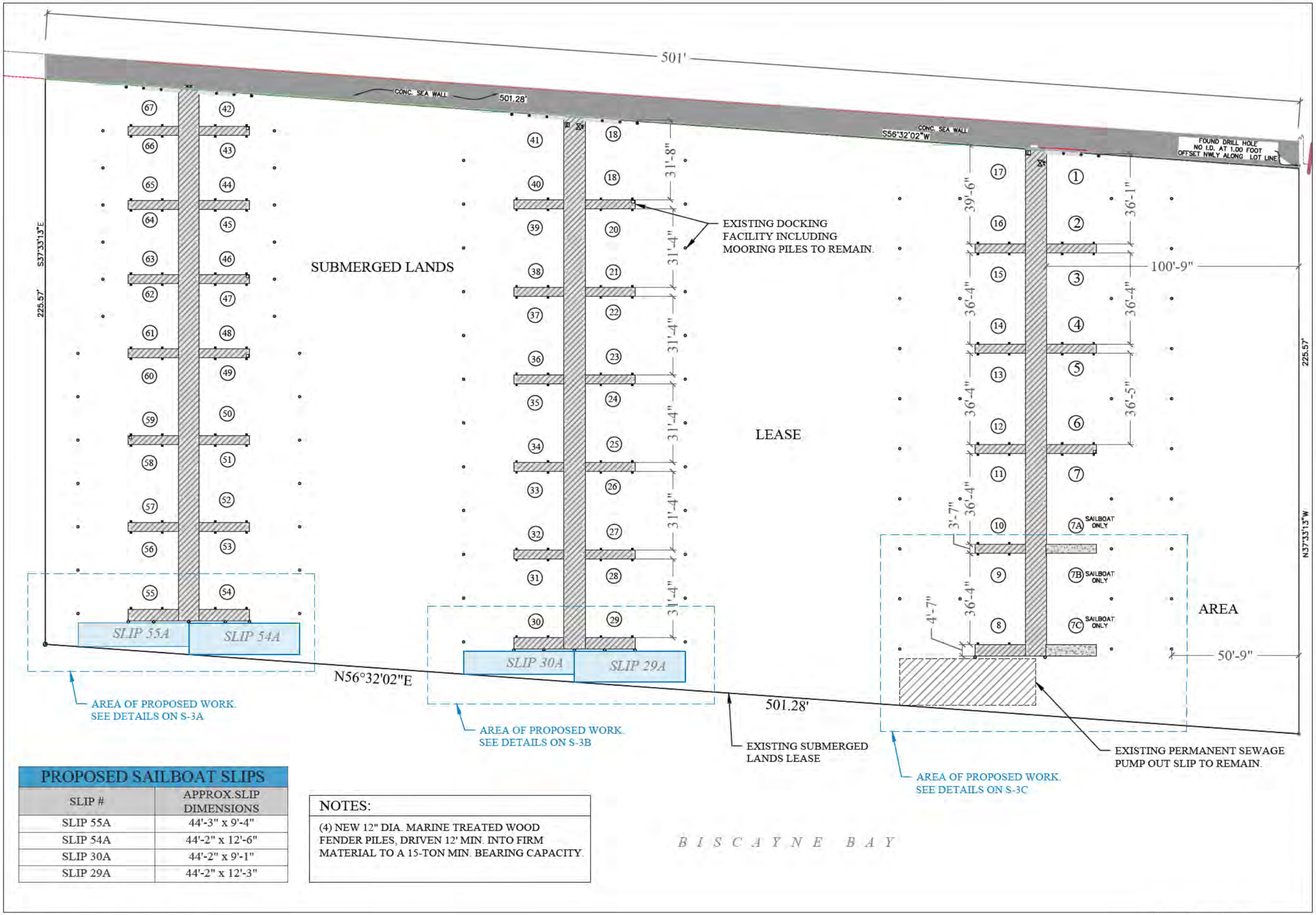

PROPOSED SAILBOAT SLIPS	
SLIP #	APPROX.SLIP DIMENSIONS
SLIP 55A	44'-3" x 9'-4"
SLIP 54A	44'-2" x 12'-6"
SLIP 30A	44'-2" x 9'-1"
SLIP 29A	44'-2" x 12'-3"

NOTES:

(4) NEW 12" DIA. MARINE TREATED WOOD FENDER PILES, DRIVEN 12' MIN. INTO FIRM MATERIAL TO A 15-TON MIN. BEARING CAPACITY.

PROPOSED CONDITIONS

BRICKELL PLACE MARINA PHASE 1-SLIP ADD

Miami, Florida

CLIENT:
BRICKELL PLACE MARINA, INC.
C/O MR. ELIO JUNCO
1901 Brickell Ave
Miami, Florida 33131

ENVIRONMENTAL CONSULTANT:
OCEAN CONSULTING, LLC
340 Minorca Avenue, Suite 7
Coral Gables, Florida 33134
Tel: (305) 921-9344
Fax: (305) 677-3254

CONTRACTOR:

PROJECT ENGINEER:
DYNAMIC ENGINEERING SOLUTIONS, INC.
351 S. Cypress Road, Suite 303
Pompano Beach, FL 33060
Office - 954-545-1740
Fax - 954-545-1721

SEAL / SIGNATURE / DATE

John Omslaer
PE 52733, CA 26829

PERMIT DRAWINGS

Issue #	Issue Date
1	October 31, 2016
2	January 26, 2017

PROJECT: 16-5980

OVERALL PROPOSED SITE CONDITIONS

SCALE : AS SHOWN
SHEET NO.
S-3

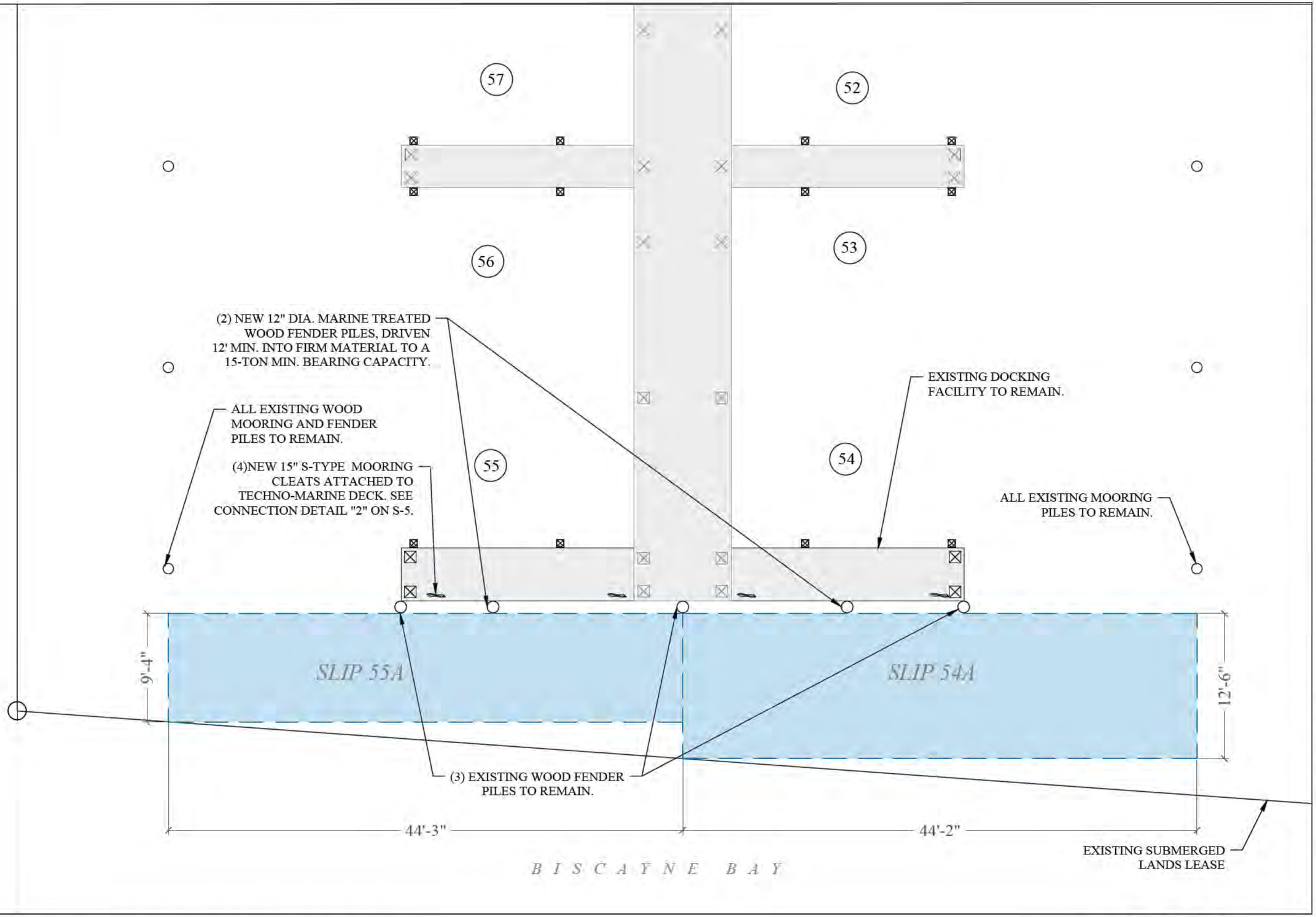

ENLARGED AREA OF WORK: SLIP 55A & SLIP 54A

N

0 8' 16'

SCALE: 1/8" = 1"

BRICKELL PLACE MARINA PHASE 1-SLIP ADD

Miami, Florida

CLIENT:
BRICKELL PLACE MARINA, INC.
C/O MR. ELIO JUNCO
1901 Brickell Ave
Miami, Florida 33131

ENVIRONMENTAL CONSULTANT:
OCEAN CONSULTING, LLC
340 Minorca Avenue, Suite 7
Coral Gables, Florida 33134
Tel: (305) 921-9344
Fax: (305) 677-3254

CONTRACTOR:

PROJECT ENGINEER:
DYNAMIC ENGINEERING SOLUTIONS, INC.
351 S. Cypress Road, Suite 303
Pompano Beach, FL 33060
Office - 954-545-1740
Fax - 954-545-1721

SEAL / SIGNATURE / DATE

John Omslaer
PE 52733, CA 26829

PERMIT DRAWINGS

Issue #	Issue Date
1	October 31, 2016
2	January 26, 2017

PROJECT: 16-5980

ENLARGED AREA OF WORK: PROPOSED FINGER PIER CONDITIONS
SLIP 554A & 54A

SCALE : AS SHOWN

SHEET NO.

S-3A

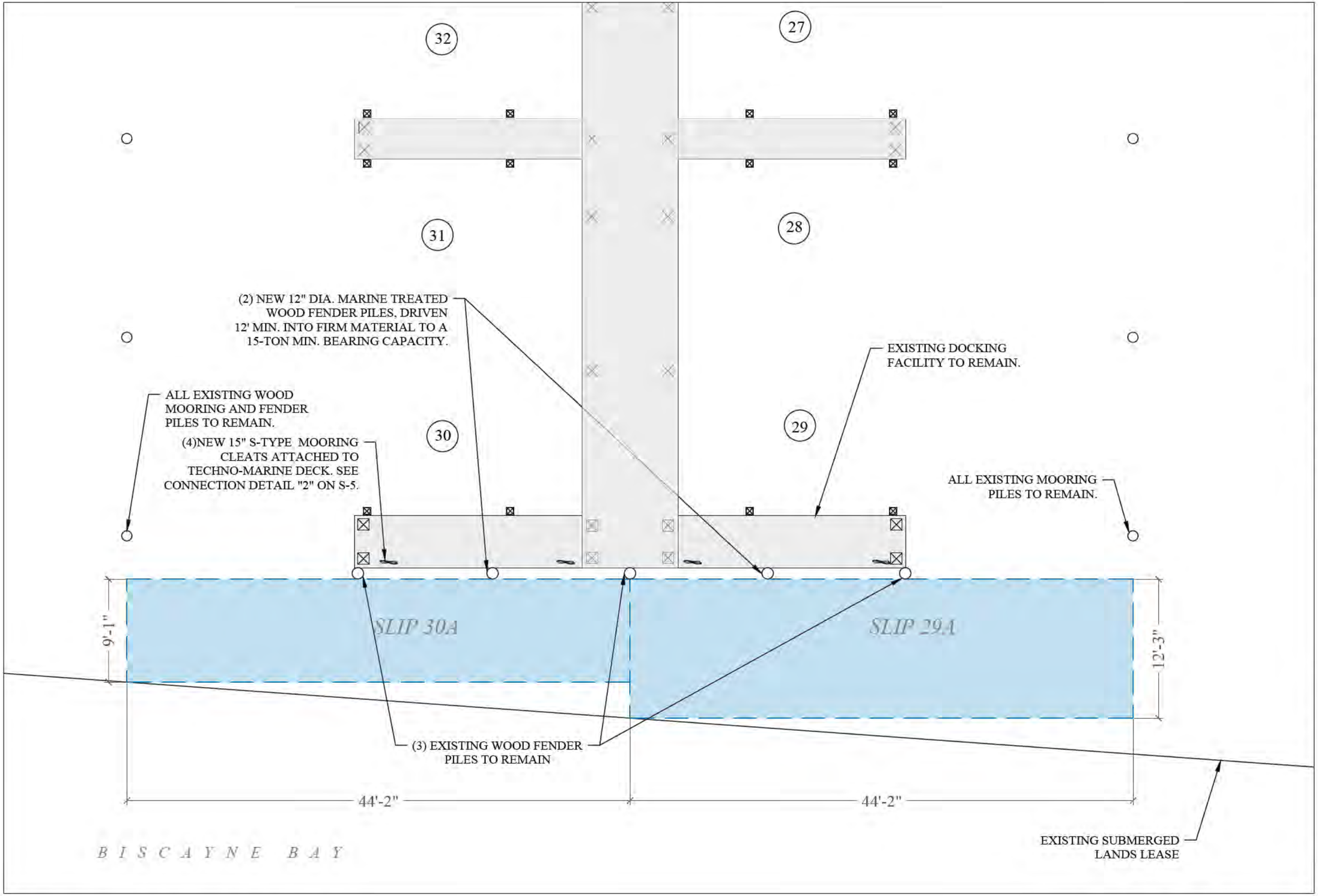

ENLARGED AREA OF WORK: SLIP 30A & 29A

N

0 8' 16'

SCALE: 1/8" = 1"

BRICKELL PLACE MARINA PHASE 1-SLIP ADD

Miami, Florida

CLIENT:
BRICKELL PLACE MARINA, INC.
C/O MR. ELIO JUNCO
1901 Brickell Ave
Miami, Florida 33131

ENVIRONMENTAL CONSULTANT:
OCEAN CONSULTING, LLC
340 Minorca Avenue, Suite 7
Coral Gables, Florida 33134
Tel: (305) 921-9344
Fax: (305) 677-3254

CONTRACTOR:

PROJECT ENGINEER:
DYNAMIC ENGINEERING SOLUTIONS, INC.
351 S. Cypress Road, Suite 303
Pompano Beach, FL 33060
Office - 954-545-1740
Fax - 954-545-1721

SEAL / SIGNATURE / DATE

John Omslaer
PE 52733, CA 26829

PERMIT DRAWINGS

Issue #	Issue Date
1	October 31, 2016
2	January 26, 2017

PROJECT: 16-5980

ENLARGED AREA OF WORK: PROPOSED FINGER PIER CONDITIONS
SLIP 30A & 29A

SCALE : AS SHOWN

SHEET NO.

S-3B

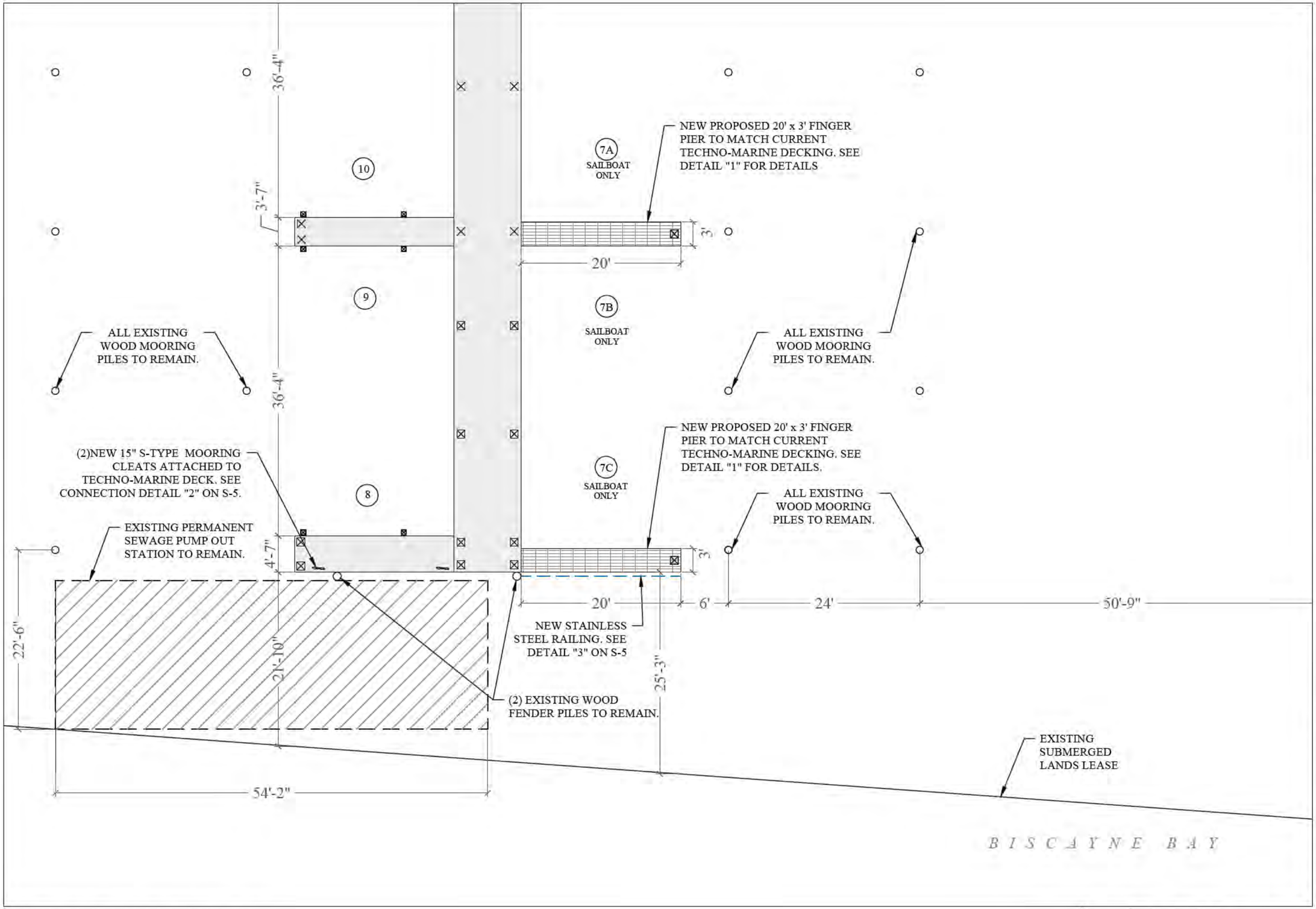

ENLARGED AREA OF WORK: SLIP 5

N

0 8' 16'

SCALE: 1/8" = 1"

BRICKELL PLACE MARINA PHASE 1-SLIP ADD

Miami, Florida

CLIENT:

BRICKELL PLACE MARINA, INC.
C/O MR. ELIO JUNCO
1901 Brickell Ave
Miami, Florida 33131

ENVIRONMENTAL CONSULTANT:

OCEAN CONSULTING, LLC
340 Minorca Avenue, Suite 7
Coral Gables, Florida 33134
Tel: (305) 921-9344
Fax: (305) 677-3254

CONTRACTOR:

PROJECT ENGINEER:

DYNAMIC ENGINEERING SOLUTIONS, INC.
351 S. Cypress Road, Suite 303
Pompano Beach, FL 33060
Office - 954-545-1740
Fax - 954-545-1721

SEAL / SIGNATURE / DATE

John Omslaer
PE 52733, CA 26829

PERMIT DRAWINGS

Issue #	Issue Date
1	October 31, 2016
2	January 26, 2017

PROJECT: 16-5980

ENLARGED AREA OF WORK: PROPOSED FINGER PIER CONDITIONS

SCALE : AS SHOWN

SHEET NO.

S-3C

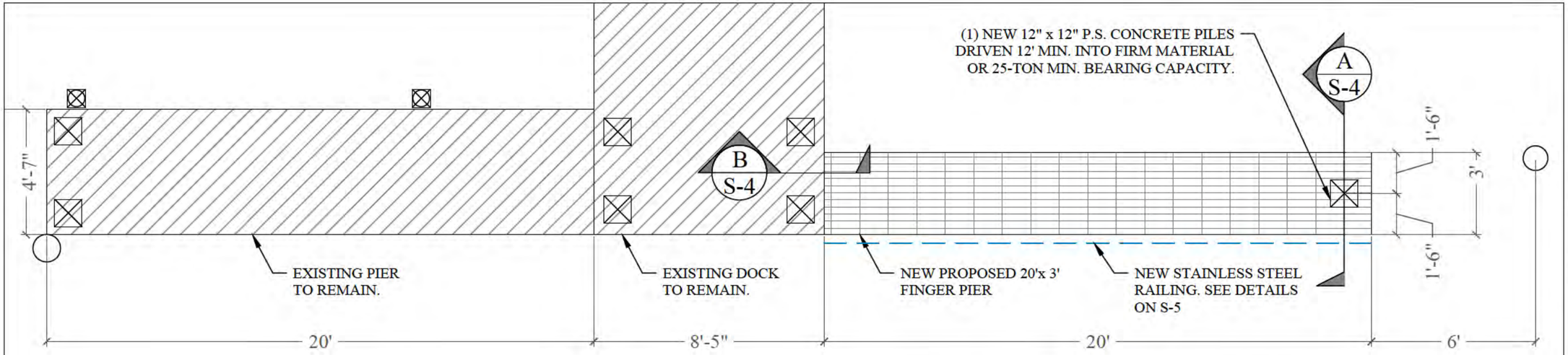

TYPICAL FINGER PIER ADDITION (1 / S-1)

SCALE: 1/4" = 1'-0"

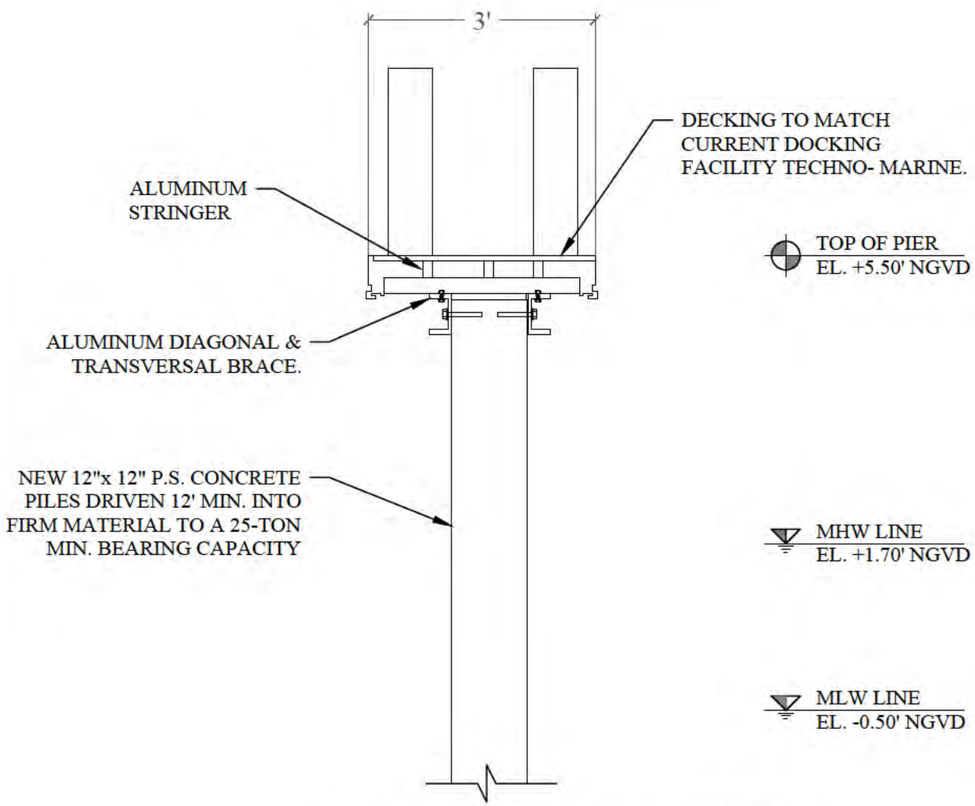

TYP. FINGER PIER SECTION (A / S-4)

SCALE: ½" = 1'-0"

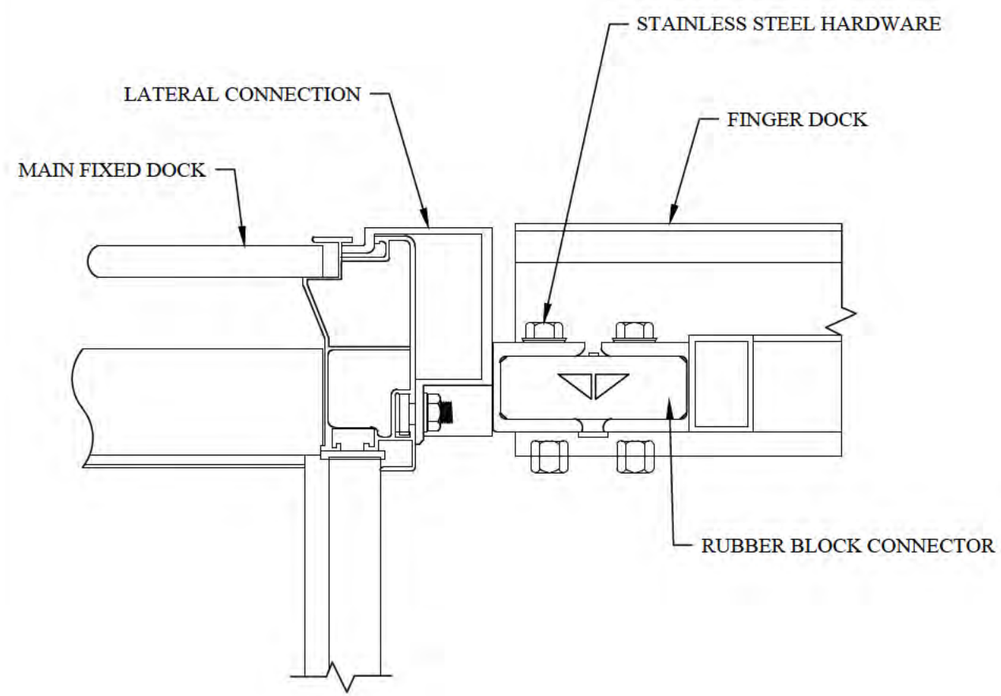

FINGER PIER TO MAIN DOCK CONNECTION (B / S-4)

SCALE: ½" = 1'-0"

BRICKELL PLACE MARINA PHASE 1-SLIP ADD

Miami, Florida

CLIENT:
BRICKELL PLACE MARINA, INC.
C/O MR. ELIO JUNCO
1901 Brickell Ave
Miami, Florida 33131

ENVIRONMENTAL CONSULTANT:
OCEAN CONSULTING, LLC
340 Minorca Avenue, Suite 7
Coral Gables, Florida 33134
Tel: (305) 921-9344
Fax: (305) 677-3254

CONTRACTOR:

PROJECT ENGINEER:
DYNAMIC ENGINEERING SOLUTIONS, INC.
351 S. Cypress Road, Suite 303
Pompano Beach, FL 33060
Office - 954-545-1740
Fax - 954-545-1721

SEAL / SIGNATURE / DATE

John Omslaer
PE 52733, CA 26829

PERMIT DRAWINGS

Issue #	Issue Date
1	October 31, 2016
2	January 26, 2017

PROJECT: 16-5980

PROPOSED FINGER PIER SECTION DETAILS

SCALE : AS SHOWN

SHEET NO.

S-4

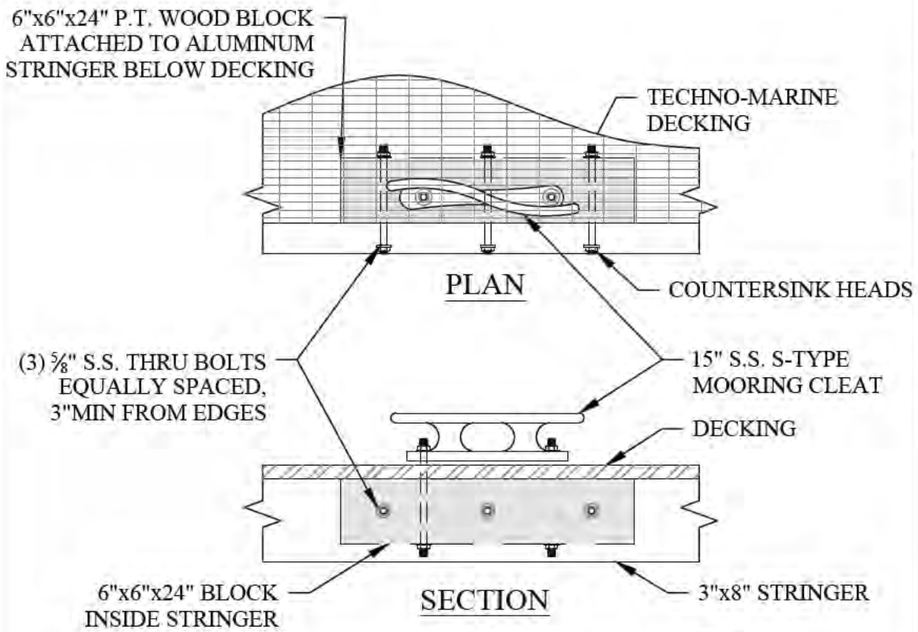

TYP. CLEAT INTO FINGER PIER DETAIL (2 / S-5)
SCALE: 1" = 1'-0"

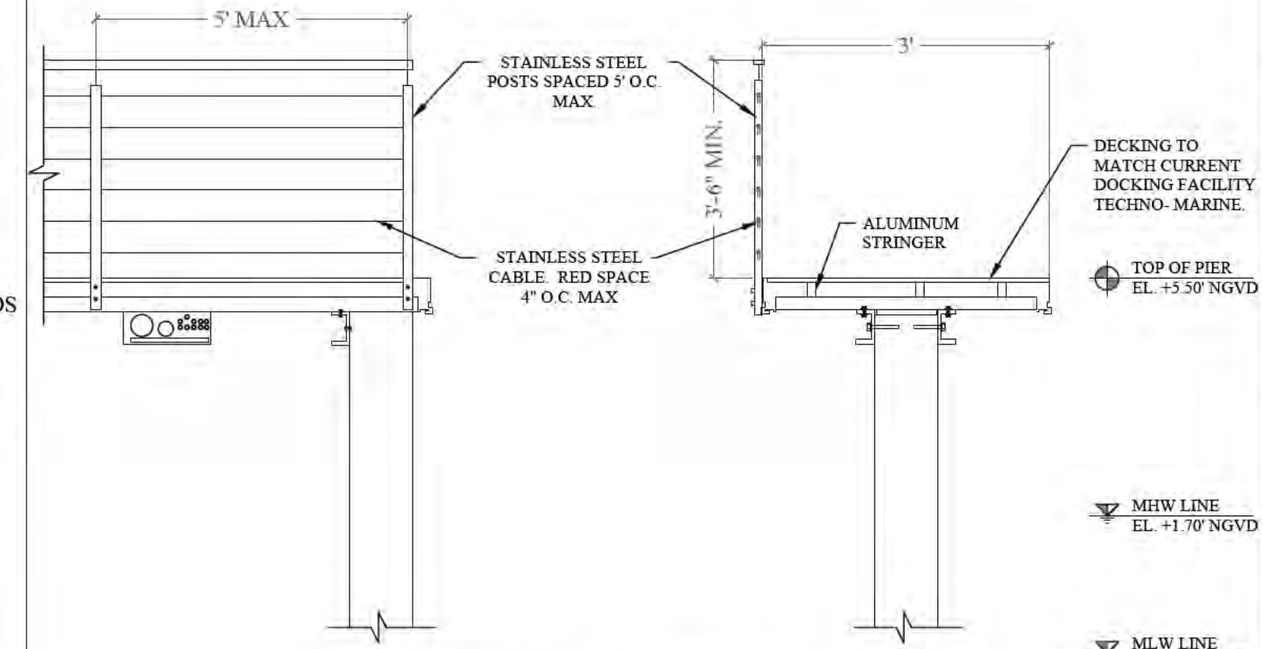

TYP. FINGER PIER SECTION (3 / S-5)
SCALE: ½" = 1'-0"

PILE NOTE:

CONCRETE COMPRESIVE STRENGTH:
3000 PSI @ RELEASE
5000 PSI @ DRIVING

SPIRAL TO BE ASTM A-82 TIGHT HARD-DRAWN WIRE

STRANDS - USE FOUR 7/16" (270K) LOW RELAXATION ASTM 416-87 UNCOATED 7-WIRE STRANDS TENSIONED TO 2.33 KIPS EACH

1-POINT PICKUP-MAXIMUM L = 50'

2-POINT PICKUP-MAXIMUM L = 62'

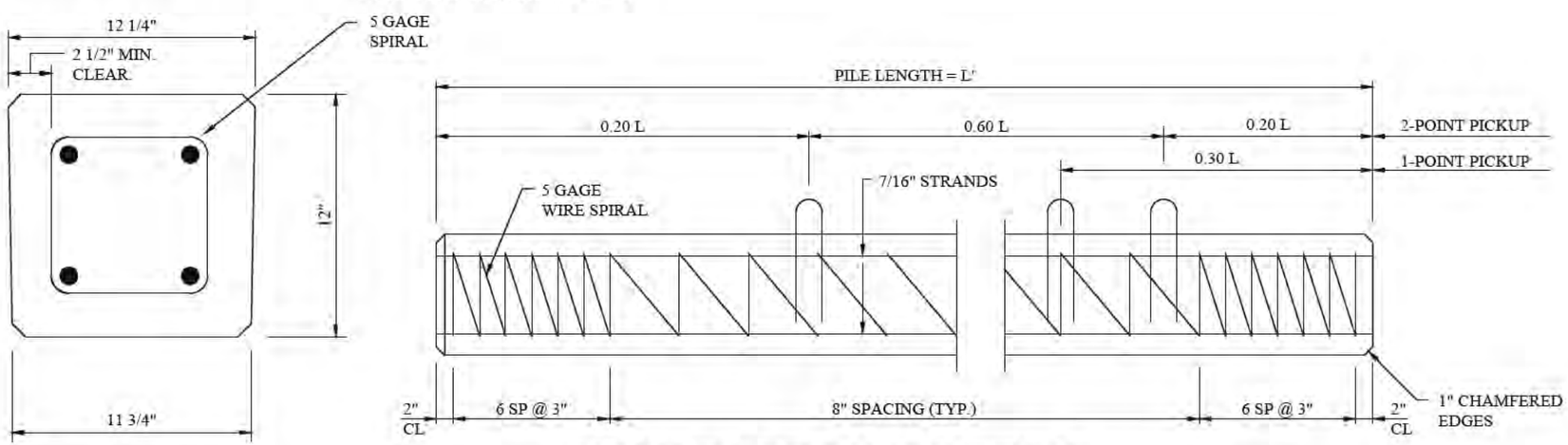

CONCRETE PILE DETAIL

N.T.S.

BRICKELL PLACE MARINA PHASE 1-SLIP ADD

Miami, Florida

CLIENT:
BRICKELL PLACE MARINA, INC.
C/O MR. ELIO JUNCO
1901 Brickell Ave
Miami, Florida 33131

ENVIRONMENTAL CONSULTANT:
OCEAN CONSULTING, LLC
340 Minorca Avenue, Suite 7
Coral Gables, Florida 33134
Tel: (305) 921-9344
Fax: (305) 677-3254

CONTRACTOR:

PROJECT ENGINEER:
DYNAMIC ENGINEERING SOLUTIONS, INC.
351 S. Cypress Road, Suite 303
Pompano Beach, FL 33060
Office - 954-545-1740
Fax - 954-545-1721

SEAL / SIGNATURE / DATE

John Omslaer
PE 52733, CA 26829

PERMIT DRAWINGS

Issue #	Issue Date
1	October 31, 2016
2	January 26, 2017

PROJECT: 16-5980

PILE DETAILS

SCALE : AS SHOWN
SHEET NO.
S-5